NOTE NO.1 - MANHOLE CASTING AND COVER SHALL BE AS DEFINED IN SECTION 1205-2.6.

NOTE NO.2 - CRETEX 48" TYPE II COVER

NOTE NO.3 - MANHOLE CASTING ADJUSTMENT - SEE STANDARD DETAIL NO. 1206-1.

NOTE NO.4 - 2" STYROFOAM INSULATION SHALL BE AS DEFINED IN SECTION 901-3.13 INSTALLED AROUND THE OUTSIDE OF THE TOP 4 FEET OF THE MANHOLE AND HELD IN PLACE BY BANDS OR GLUE UNTIL BACKFILLED.

NOTE NO.5 - CRETEX P2 GASKETED JOINT FOR 48" MANHOLES, CRETEX CX-4 JOINT FOR ALL OTHER SIZES OF MANHOLES OR EXTERIOR SEAL BY PRESS-SEAL GASKET CORP. EZ WRAP AND EZ STIK NO. 4 PRIMER, CRETEX SPECIALTY PRODUCTS "MAC WRAP", OR AN APPROVED EQUAL.

NOTE NO.6 - INSTALL 2" STYROFOAM INSULATION AS DEFINED IN SECTION 901-3.13 GLUED TO THE BOTTOM OF THE PRECAST COVER.

NOTE NO.7 - 2" OPENING SHALL BE LEFT AROUND PIPE AND FILLED WITH KENTSEAL OR AN APPROVED EQUAL.

NOTE NO.8 - 1" AUTOMATIC AIR RELEASE VALVE - SEE SECTION 1205-2.10

NOTE NO.9 - SEAL WITH KENTSEAL OR AN APPROVED EQUAL.

NOTE NO.10 - SEE SECTION 1205-2.9 FOR PRECAST MANHOLE BASE REINFORCEMENT.

NOTE NO.11 - EXTERNAL MANHOLE CHIMNEY SEAL AS MANUFACTURED BY CRETEX OR AN APPROVED EQUAL, IF SPECIFIED.

NOTE NO.12 - STEPS SHALL NOT BE PLACED IN SANITARY SEWER, STORM SEWER OR AIR RELEASE MANHOLES OR INLETS UNLESS SPECIFIED. IF SPECIFIED, THE MANHOLE STEPS SHALL BE DELTA SUREFOOT OR APPROVED EQUAL. STEPS SHALL BE SPACED 16" ON CENTER.

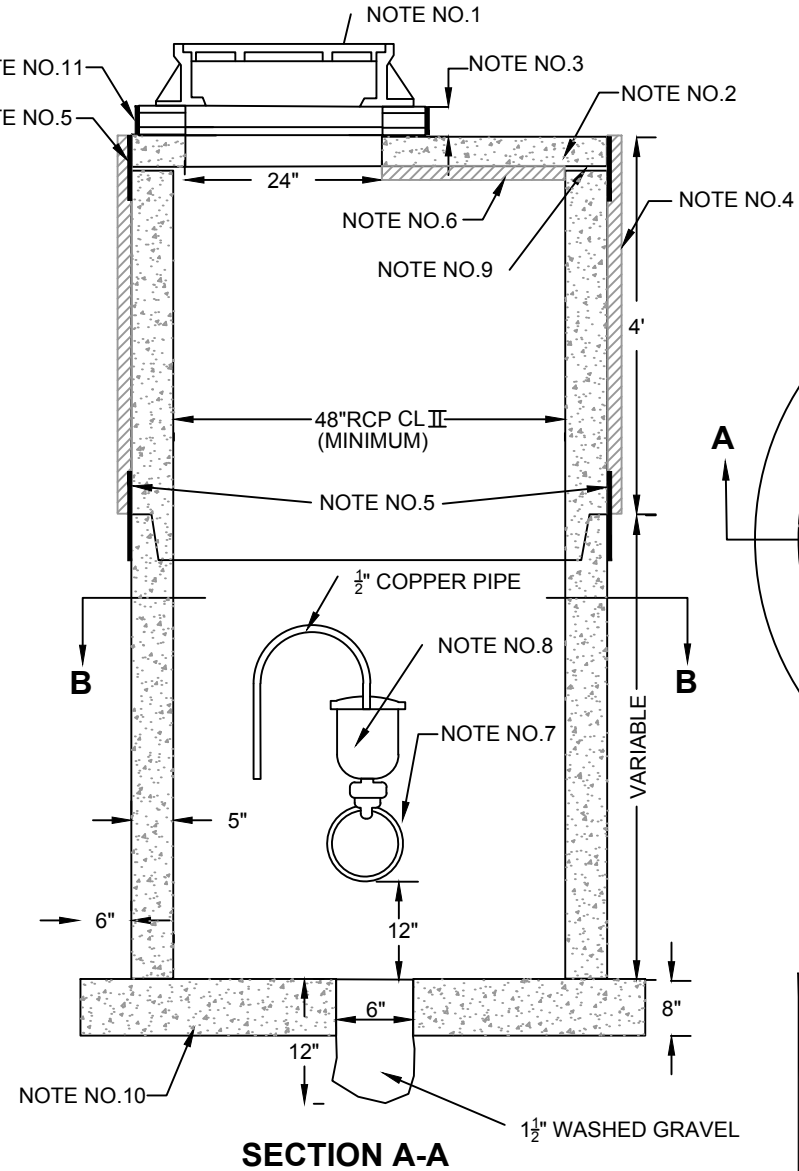

SECTION A-A

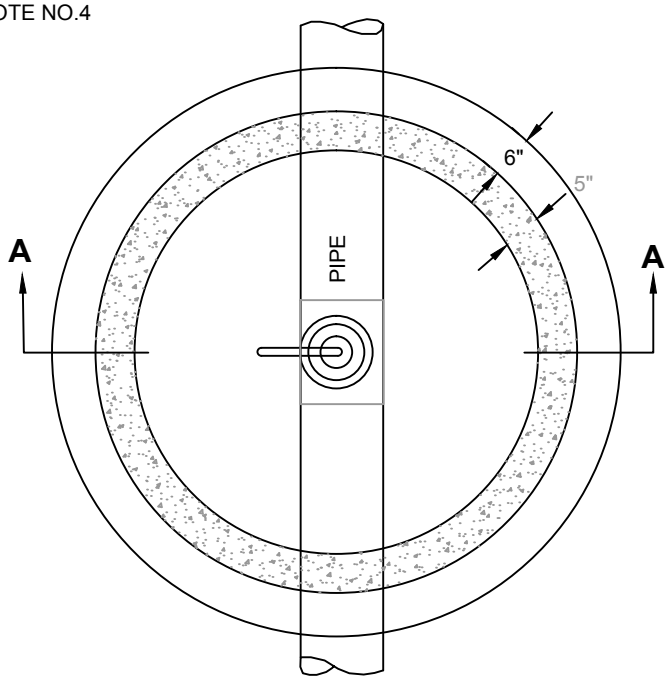

SECTION B-B

CITY OF WATFORD CITY, NORTH DAKOTA
PUBLIC WORKS DEPARTMENT

AIR RELEASE MANHOLE

APPROVED FOR PUBLICATION

City Engineer Date

DWG. NO.

1205-11

File: L:\Municipal Projects\Watford City\Miscellaneous Projects\Standard Details\1205-11 Air Release Manhole.dwg